Item #
AX20-3B

AdvanTex™ Treatment System
AX20 Series - Mode 3B

Top View

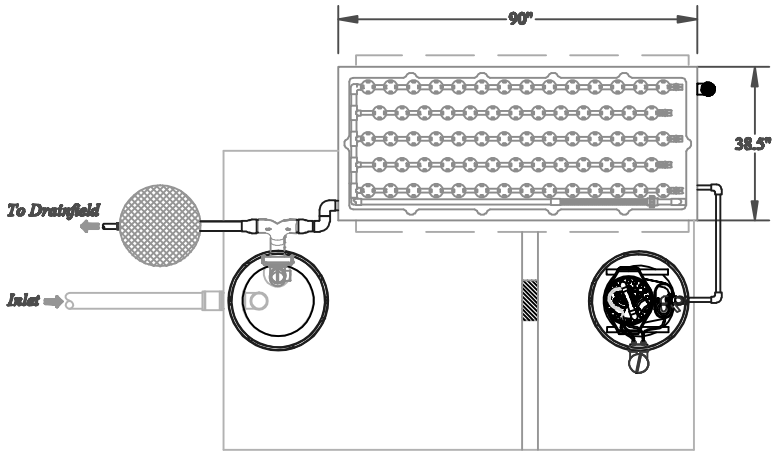

Section View

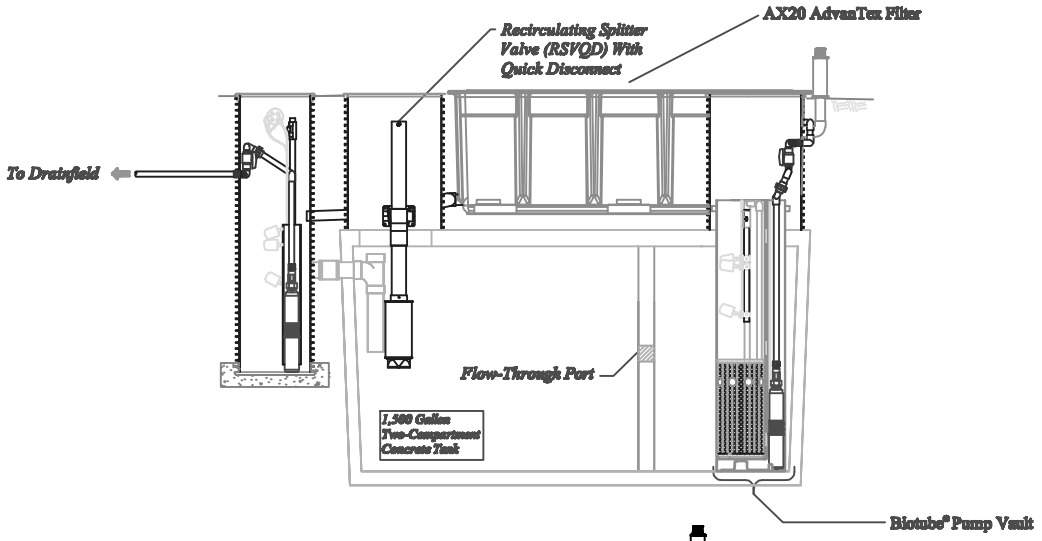

End View

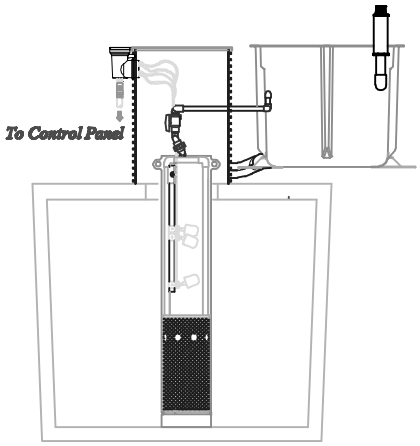

Orenco Systems®
Incorporated

VALLEY PRECAST, Inc.

Water & Wastewater
- Systems
- Products
- Service

(719) 395-6764
Fax: (719) 395-3727
Website: www.valleyprecast.com
Email: frontdesk@valleyprecast.com

28005 Co. Rd. 317
P.O. Box 925
Buena Vista, CO 81211