DOSING SIPHONS Prime & Function

What are they?

The dosing siphon is a mechanism that is installed in a septic tank that converts small continuous flows into an intermittent release of effluent. Dosing siphons are made of PVC plastic and have no moving parts. They rely strictly on gravity as their only source of power to release the effluent to the field.

How do they work?

Before being put into use, the siphon must be primed by filling the trap with water. When the fluid level in the tank rises above the open end of the snifter tube, it seals air in the bell and long leg of the siphon. As the fluid in the tank rises further, the pressure on the confined air space increases until it forces the water out of the long leg of the trap. As the air follows the water around the bend of the trap, its upward rush forces water out of the short leg into the discharge pipe activating the siphon. The siphoning action draws down the fluid in the tank until its level is below the bottom of the bell. Air under the bell 'breaks siphon' and the process begins again.

Why use a siphon?

The 'rushes' or 'doses' of effluent will cover the square footage of your drainfield and use your field more appropriately. If sized properly, a siphon can also allow your drainfield to become pressurized leading to increased effectiveness in dispersing the effluent and treating the contaminants.

When should a siphon be used?

- Use to reduce drainfield size and save money and space.
- Use any time to get a longer life span from your drainfield.
- Use for better treatment of effluent before release to ground water.

Important Points

- *If primed too early,the water could freeze in the winter or evaporate in the summer. Prime just before the tank is put into service for optimal results.*
- *We encourage drilling a 3/16" hole in the vertical cleanout downstream from the tank following a 3" siphon. This will allow any renegade air bubbles a place to escape.*
- *Our entire line of Orenco® siphons some complete with a screen that filters the effluent and cuts the amount of suspended solids released to the field.*

200 Series

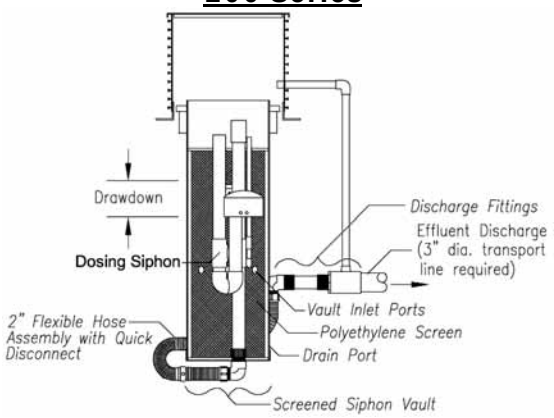

300 Series

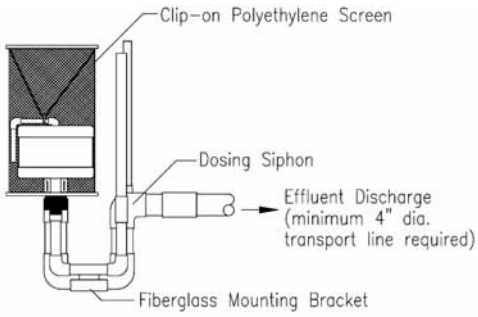

We stock many sizes of siphons from the **200 Series** (2 inch) and **300 Series** (3 inch); larger sizes are available on request. All units come completely installed and simply need to be primed by the end user. Maintenance is minimal but should be inspected periodically to assure proper operation. Valley Precast has a maintenance program available if you are interested.